SYSTEM WIRING DIAGRAMS
Exterior Lamps Circuit
1997 Chevrolet Blazer

For DIAKOM-AUTO http://www.diakom.ru Taganrog support@diakom.ru (8634)315187

Copyright © 1998 Mitchell Repair Information Company, LLC
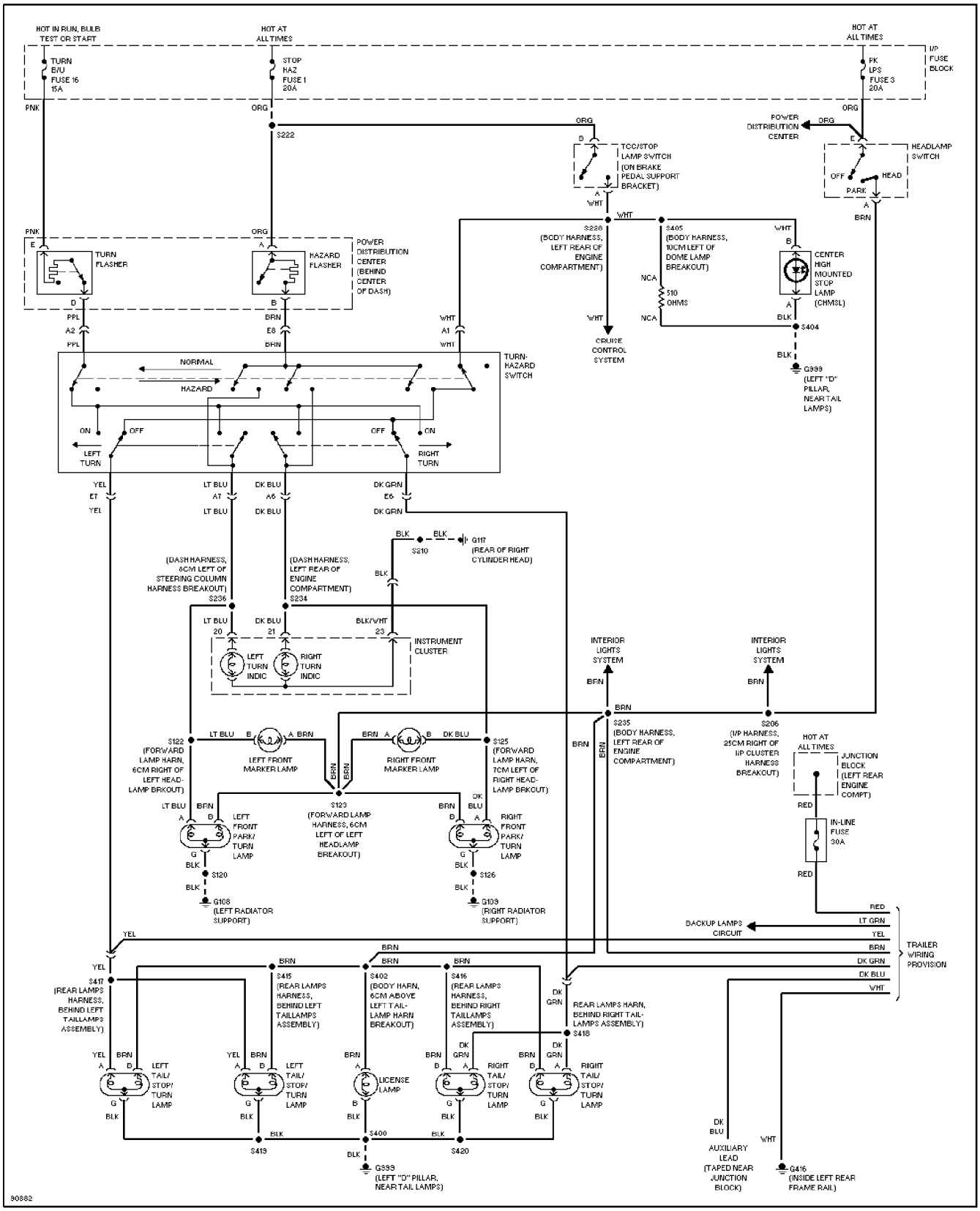
Monday, December 11, 2000 10:36AM